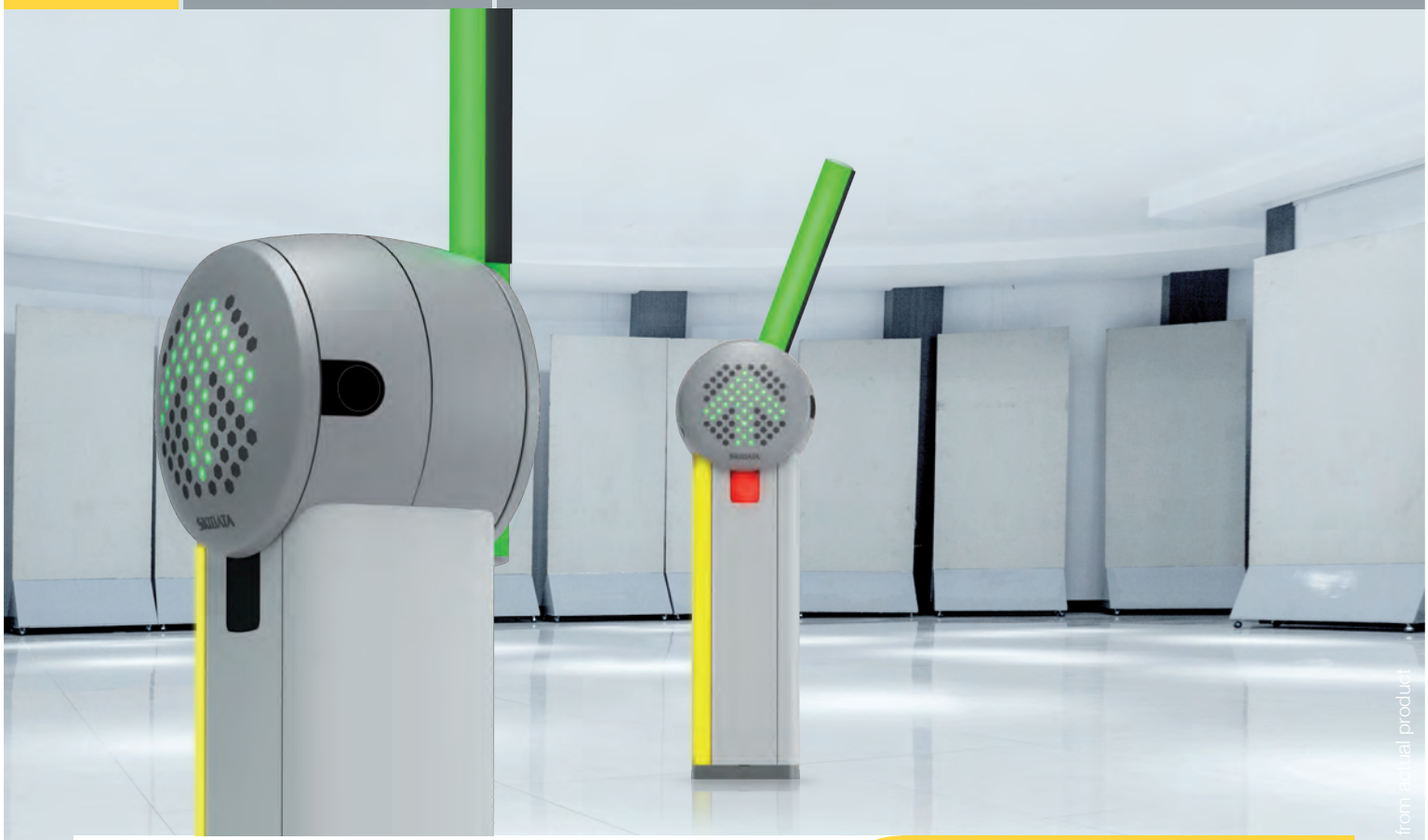

Picture may vary from actual product

Barrier.Gate

The barrier gate to meet every challenge.

No barriers for you and your applications –
but a distinct boundary for your parking facility!

Quick Movements, Longer Booms

- Boom lengths up to 4,5 meters (14,76 ft) in one single variation of the basic device with optional magnetic lock to prevent misuse.
- Configurable opening times: openings are up to 15% quicker than other systems.

Entirely New Applications

- Display of various symbols via the integrated track light.
- Surveillance using a built-in video camera that is safe against vandalism.
- Unique: Colored joint barrier boom using RGB LEDs for safety and recognisability.

The Intelligent System Without Column

- The inexpensive solution for your long-term parking facility: You only need the barrier gate, no column.
- Integrable RFID readers solve the task of parking facility monitoring.
- Small amount of components.

High-Quality, Energy-Optimized Components

- High-quality design that is the best in its field.
- Special focus on the use of energy-saving components.
- Operation in a wide range of temperatures possible without any extra heating or ventilation.

Barrier.Gate ‘Smart’ -
The intelligent parking system without a column

The Barrier.Gate ‘Smart’ is an intelligent system in which the function of a parking column is already integrated into the barrier. With the reduction to a single product, you benefit not only from lower acquisition costs but also in the longer term through markedly lower energy consumption and the saving of space. The use of high quality materials ensures an easy installation and maintenance, and cost reduction during operation. Perfect, for example, for office or residential complex parking spaces in which the users have RFID-based access permission.

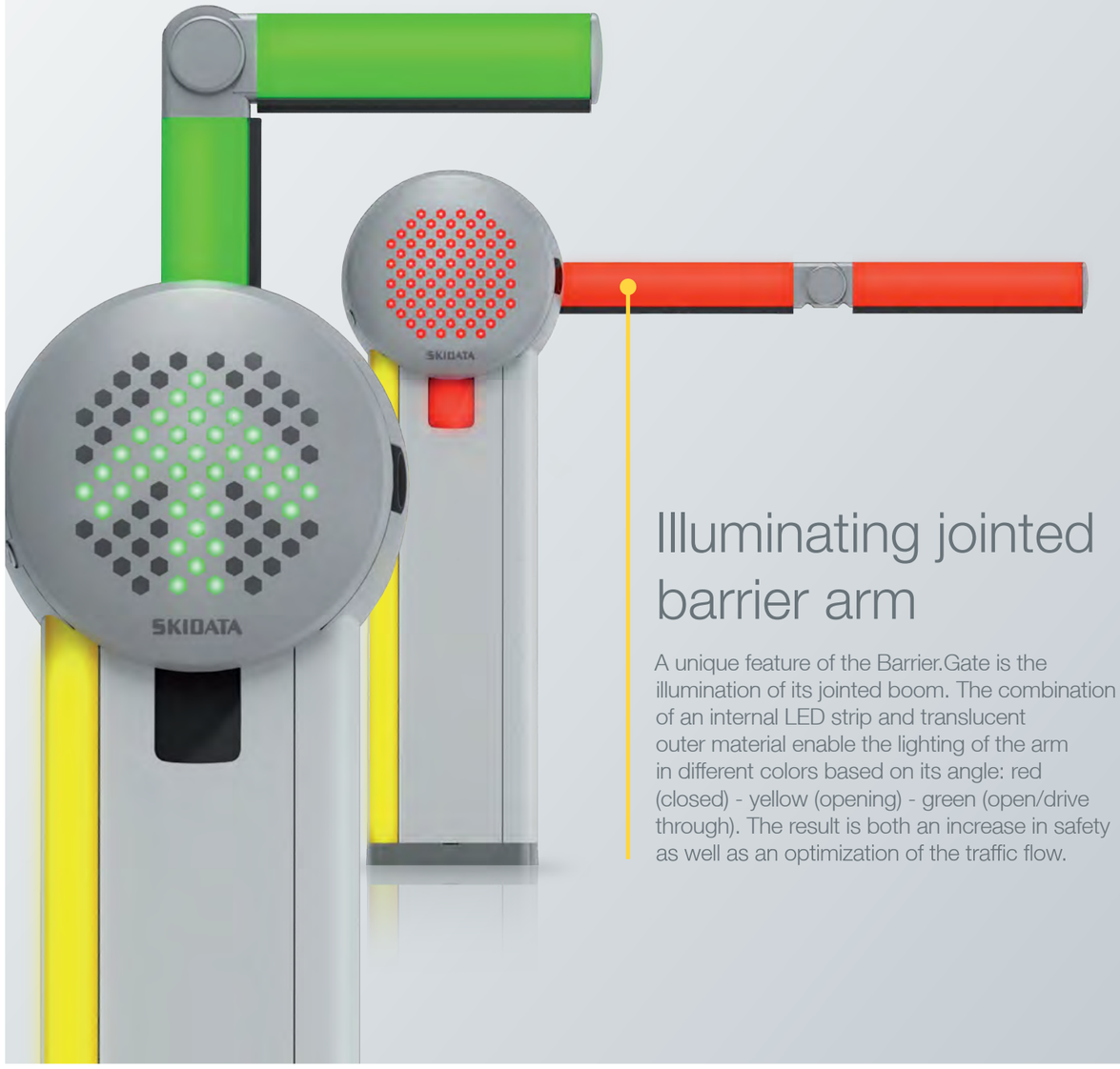

Illuminating jointed barrier arm

A unique feature of the Barrier.Gate is the illumination of its jointed boom. The combination of an internal LED strip and translucent outer material enable the lighting of the arm in different colors based on its angle: red (closed) - yellow (opening) - green (open/drive through). The result is both an increase in safety as well as an optimization of the traffic flow.

Traffic light

The lighted display integrated into the head of the barrier makes it possible to communicate with the end user using easily understandable, intuitive signals. These predefined symbols are shown depending on the condition of the lane or the position of the barrier arm. The traffic light is integrated into and well protected within the housing of the barrier gate and is positioned in the direct field of view of the driver. This lets you optimize the flow of traffic and the orientation of the customer without the need for additional components such as special lights or overhead displays.

Pillar with magnetic lock

To ensure that especially longer barrier arms are safely positioned, SKIDATA now has a pillar with a magnetic lock available. The magnet used has a holding force of approximately 50 kg, and is protected against oxidation and a resulting power loss by a special coating. The flow of electricity to the magnet begins during the closing movement which provides for a low-noise closing operation.

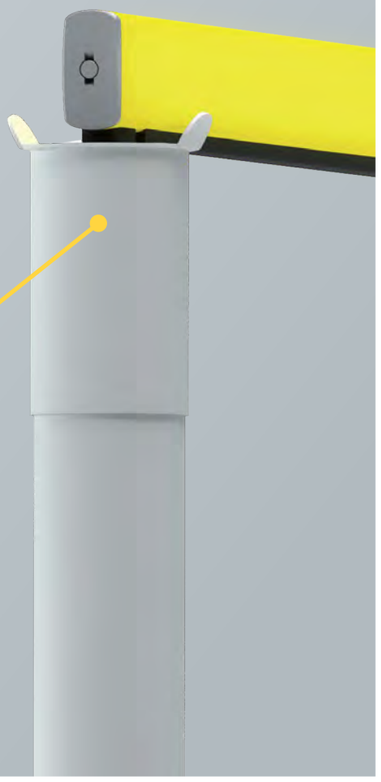

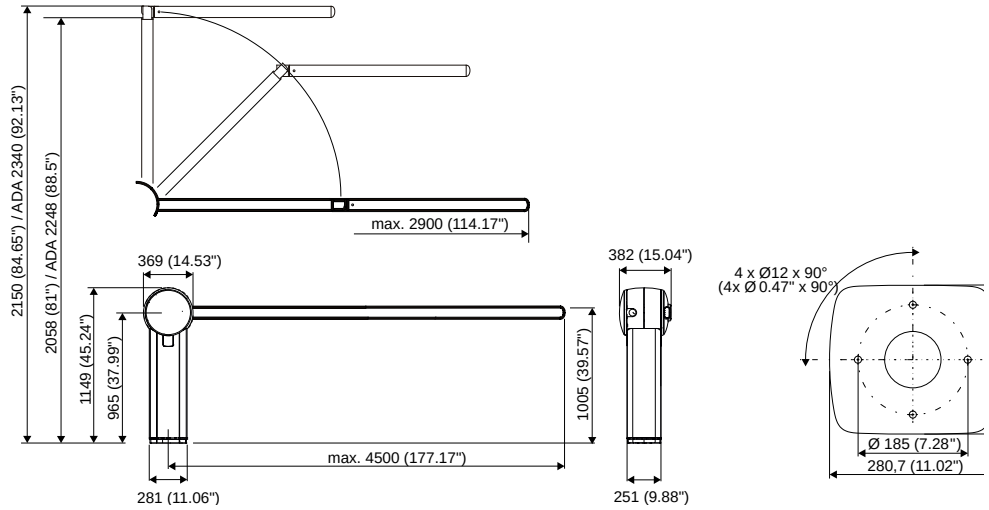

all dimensions in mm

Features

- Housing made from high-impact resistant plastic; support stand manufactured from eloxed aluminum
- Integrated drive gear motor with frequency converter control and slipping clutch
- Self-locking drive (stops motion in case of power failure)
- Barrier breakage detector
- Variable opening times, configurable in accordance with barrier arm length
- Barrier arms made from GRP
- Barrier arm lengths up to 4,5 m (14,76 ft)
- Barrier arms are easy to mount
- Versions for left-hand and right-hand traffic

Standard Version

- Parking barrier with mounting plate, main body manufactured from aluminum, drive motor and washer for barrier arm installation
- Electronic control assembly with data connection to Power. Gate, Lite.Gate or Column.Gate parking column
- Yellow contour stripe
- Triangular key for opening the housing

Options

Barrier arms

- Standard: Color: Traffic Yellow RAL 1023/translucent; non-illuminated for lengths up to 4,5 m (14,76 ft)
- Multi-color version: Color: white/translucent, with interior RGB LEDs for optional illumination of barrier arm in red, yellow and green to indicate closed, opening, and open states, respectively; lengths up to 4,5 m (14,76 ft)
- Jointed barrier arm: Overhead clearance: 2,07 m (6,8 ft) or 2,25 m (7,38 ft); Lengths 2,5 m (8,2 ft) or 2,9 m (9,5 ft)
- Multi-color jointed barrier arm with interior RGB LEDs: Overhead clearance: 2,07 m (6,8 ft) or 2,25 m (7,38 ft); Lengths 2,5 m (8,2 ft)

Functional modules

- Up to 2 double loop detectors for detection of vehicles and passage direction
- Bi-directional red warning light to indicate moving barrier arm
- Beeper for acoustic indication of barrier motion
- Crash guard, made from stainless steel
- Interface for illumination options and optional loop detectors
- Interface for up to 16 additional I/Os
- Barrier lock for Webkey system
- Lock for installation in locking systems
- White contour stripe
- Backlight for contour stripe
- Barrier arm support (with or without magnetic lock)

Technical Specifications	
Dimensions	382 mm × 1149 mm × 369 mm / 15,04“ × 45,24“ × 14,53“ (w × h × d)
Weight	48 kg (105,82 lbs) (without barrier arm)
Operating voltage	100-240 V ±10% / 50-60 Hz / Maximum current 1,8 A at 240 V or 4,8 A at 100 V With heater for 220-240 V ±10% / 50-60 Hz / 3,8 A maximum current With heater for 100-127 V ±10% / 50-60 Hz / 8,1 A maximum current
Temperature range	Standard: –20 °C to +50 °C (–4 °F to +122 °F) Cold Kit (heater): –40 °C to +50 °C (–40 °F to +122 °F) Hot Kit: –20 °C to +55 °C (–4 °F to +131 °F)
Support Stand - Color	Light Gray RAL 7035 (Anodized Aluminum)
Top Section - Color	Dusty Gray RAL 7043 (Plastic)
Base Section - Color	Traffic Gray RAL 7043 (Die-Cast Aluminum)
Contour Stripes - Color	Traffic Yellow RAL 1023
Degree of protection	IP44
System Requirements	Parking.Logic V 05.00.04 or higher
Declarations / Certifications	CE, cNRTLus, GOST

SKIDATA AG • Untersbergstraße 40 • A-5083 Grödig/Salzburg [t] +43 6246 888-0 • [f] +43 6246 888-7 • [e] info@skidata.com [w] www.skidata.com • Version 1.6 • 10.05.2016
© 2016 SKIDATA AG. All rights reserved. The content provided herein is subject to change and possible editorial errors. Country-specific versions may vary. SKIDATA® is a registered trademark of SKIDATA AG in the USA, the European Union and other countries. Terms and conditions of the authorized SKIDATA distributor apply. The operator is fully responsible for compliance with any legal provisions applicable to the operation of the products.